Evens Audio CA-208

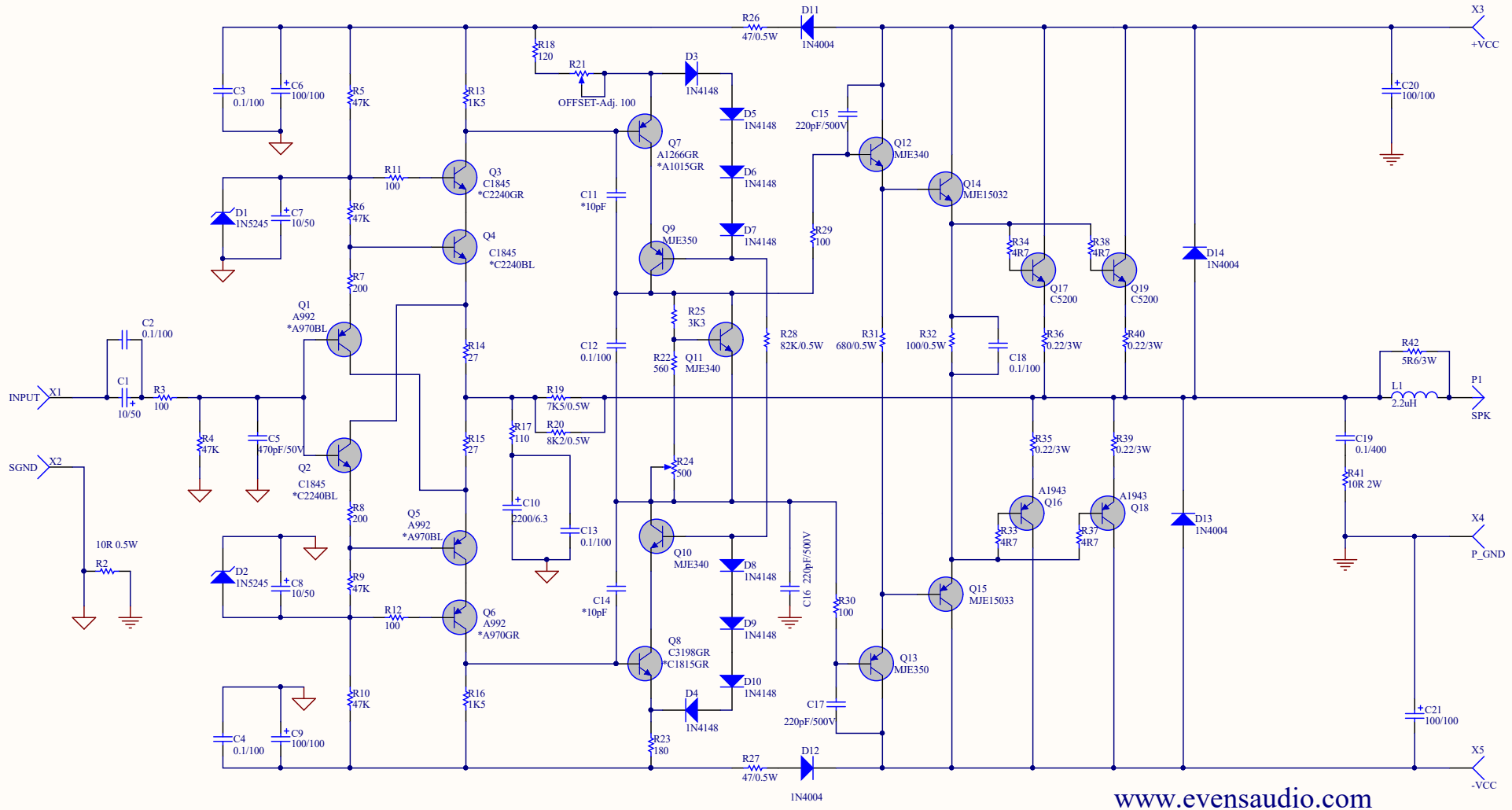

www.evensaudio.com

Title		
Size B	Number	Revision
Date: 6/7/2020		Sheet of
File: F:\pcb\..\CA-208.SchDoc		Drawn By: